Using the 551 with the 565.

Customers with 551 Integrated Amplifiers can now upgrade to the Meridian Digital Theatre. When set to *TYPE 4* the 551 can be used for both analogue source selection and power amplification for the surround channels [1]. For setting *TYPE*, see page 16 of the *551 User Guide*.

The preamp section of the 551 is used for source selection to the Tape Output. This is connected to the Analogue Input of the 565 as shown in the diagram.

The power amplifiers of the 551 can then drive any of the speakers in a multichannel system, typically the surround channels. The required analogue outputs of the 565 are connected to the Tape 1 / A4 input of the 551. For the surround channels, these are outputs 7 & 8.

Analogue sources are connected to the 551. Laser Disc and CD can be connected directly to the Optical and Digital Inputs of the 565.

Using a 501V or 562V as a further upgrade allows video switching and tape loop operation. The customer could then use the 551 to drive the second room of a Meridian Two-Room System and enjoy home theatre sources in another room.

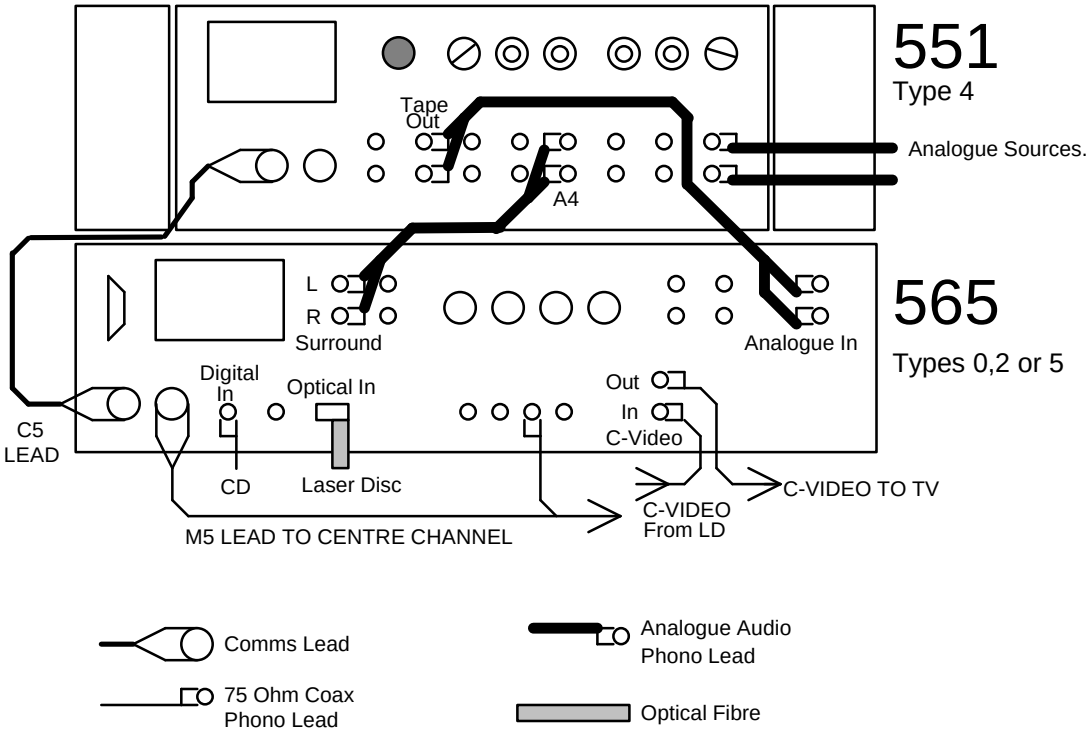

1. The EPROM required for the 551 is Version 1.4 or higher. Note that ‘Gain’ setting and the ‘Copy’ function are unavailable in the 551/565 system.

DMS 24/10/94.