DSP3300 LOUDSPEAKER

Scan this QR code for direct access to the User Guide for this product:



Alternatively, the User Guide, Datasheet and other technical information is available from the Meridian website at this address:

meridian-audio.com/home-audio-loudspeakers

IMPORTANT INFORMATION

Important safety instructions

- Read these instructions.
- Keep these instructions.
- Heed all warnings.
- Follow all instructions.
- Do not use this apparatus near water.
- Clean only with a dry cloth.
- Do not block any ventilation openings. Install in accordance with the manufacturer's instructions.
- Do not install near any heat sources such as radiators, heat registers, stoves, or other apparatus (including amplifiers) that produce heat.
- Do not defeat the safety purpose of the polarized or grounding-type plug. A polarized plug has two blades with one wider than the other. A grounding type plug has two blades and a third grounding prong. The wide blade or the third prong are provided for your safety. If the provided plug does not fit into your outlet, consult an electrician for replacement of the obsolete outlet.
- Protect the power cord from being walked on or pinched particularly at plugs, convenience receptacles, and the point where they exit from the apparatus.
- Only use attachments/accessories specified by the manufacturer.
- Unplug this apparatus during lightning storms or when unused for long periods of time.
- Refer all servicing to qualified service personnel. Servicing is required when the apparatus has been damaged in any way, such as power- supply cord or plug is damaged, liquid has been spilled or objects have fallen into the apparatus, the apparatus has been exposed to rain or moisture, does not operate normally, or has been dropped.

WARNING: TO REDUCE THE RISK OF FIRE OR ELECTRIC SHOCK, DO NOT EXPOSE THIS APPARATUS TO RAIN OR MOISTURE.

This apparatus has been designed with Class 1 construction and must be connected to a mains socket outlet with a protective earthing connection (the third grounding pin).

This apparatus does not include a power switch. The apparatus may be isolated from mains power either by unplugging the power connector from the rear of the unit, or by unplugging the connector at the opposing end of the power cord or cable from its supply outlet. As a result, either or both of these connectors should remain accessible.

Safety warnings

- Do not expose the unit to dripping or splashing.
- Do not place any object filled with liquid, such as a vase, on the unit.
- Do not place naked flame sources, such as lighted candles, on the unit.
- To avoid overheating leave at least 10cm around the equipment to ensure sufficient ventilation.
- Do not position the unit in direct sunlight, near heat sources such as a radiator, or directly on top of heat producing equipment, such as a power amplifier.
- To avoid interference do not position the unit near strong electrical or magnetic radiation, such as near a power amplifier.

Radio Interference

FCC Warning: This equipment generates and can radiate radio frequency energy and if not installed and used correctly in accordance with our instructions may cause interference to radio communications or radio and television reception. It has been type-tested and complies with the limits set out in Subpart J, Part 15 of FCC rules for a Class B computing device. These limits are intended to provide reasonable protection against such interference in home installations.

EEC: This product has been designed and type-tested to comply with the limits set out in EN55013 and EN55020

CE

Copyright

Meridian Audio Ltd.
Latham Road
Huntingdon
Cambridgeshire
PE29 6YE
England

Copyright © 2011 Meridian Audio Ltd.

Connections and controls

Back-panel connections and other features:

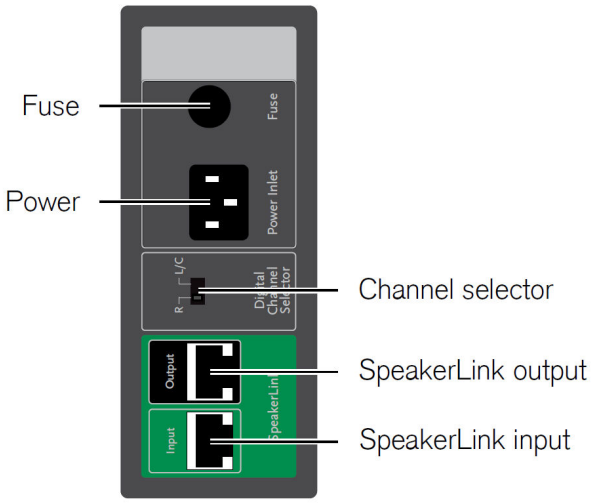

Use this connection	To connect to this
SpeakerLink input	The SpeakerLink output of a Meridian Controller product or the SpeakerLink output of another Digital Active loudspeaker when daisy-chaining loudspeakers.
SpeakerLink output	The SpeakerLink input of a second DSP3300 loudspeaker, when daisy- chaining a pair of loudspeakers, or the SpeakerLink input of a Meridian subwoofer.

Switch	Function
Digital Channel Selector	Set to **L/C** to use the DSP3300 as a left or centre-channel loudspeaker. Set to **R** to use the DSP3300 as a right channel loudspeaker.

Standby indicator

The status of the DSP3300 is shown by a green standby indicator on the back panel.

Status	Description
Dimly illuminated	Speaker in standby
Brightly illuminated	Speaker operating

The DSP3300 is switched on or into standby as appropriate via its SpeakerLink input by the Meridian system it is connected to.

Accessories supplied with this product

- Power cord
- Four rubber “bumpon” feet

If any of these items are missing please contact your dealer.

NOTE: You should retain the packaging in case you need to transport the unit.